MODEL NUMBER
ATT-0451-XX-SMA-02

NOTES:

1.0 SPECIFICATIONS:

1.1 FREQ. RANGE: DC TO 18.0 GHz

1.2 ATTENUATION ACCURACY:

0dB:	+0.3/−0dB
1−6dB:	±0.3dB
7−20dB:	±0.5dB
21−30dB:	±1.0dB

1.3 MAXIMUM VSWR:

	0.5dB	ALL OTHER dB VALUES
DC TO 4.0 GHz:	1.12:1	1.12:1
4.0 TO 8.0 GHz:	1.18:1	1.15:1
8.0 TO 18.0 GHz:	1.25:1	1.20:1

1.4 MAXIMUM INPUT POWER: 2 WATTS AVG AT +25°C DERATED LINEARLY TO 0.5 WATTS AT +125°C

1.5 OPERATING TEMP. RANGE: −65°C TO +125°C

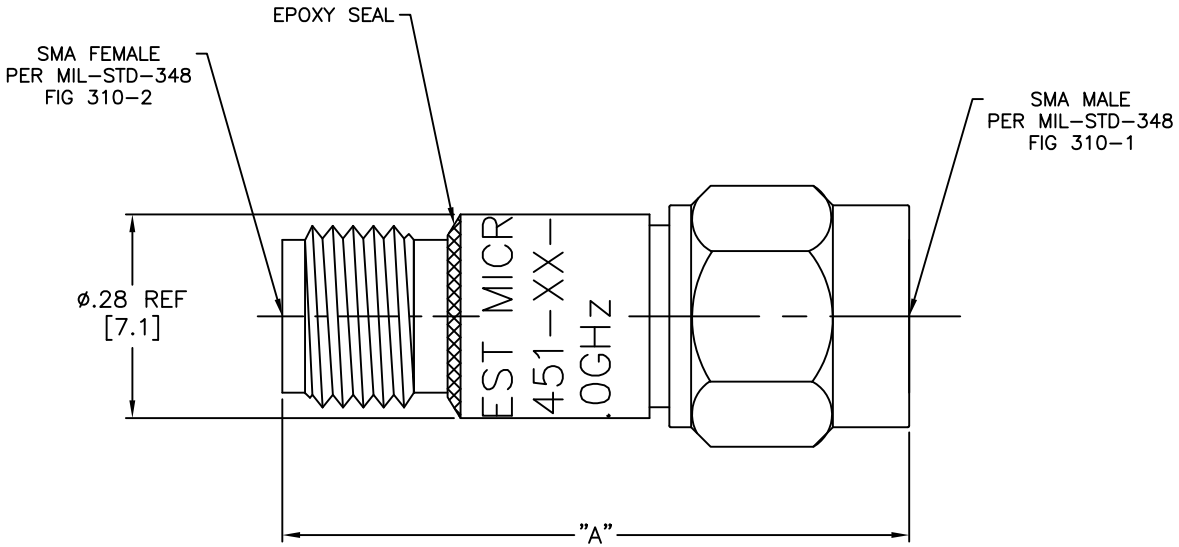

ATTENUATION VALUE	"A"
0 TO 12dB	.86(21.8)
13 TO 30dB	1.02(25.9)

REV.	DESCRIPTION	DATE
–	RELEASED	2/15/93
M	ECR 6933	1/26/90
M1	SHOW CORR. P/N	2/15/90
N	ECN 10832	9/3/91
P	REDRAW ON CAD	2/15/93
R	ECN 19049	2/24/03
S	ECN 19828	5/14/04
S1	ADD 31-40dB IN TABLE	4/2/07
T	ECO 23511	4/26/11

NOTICE: The information contained in this drawing is proprietary and must not be used without the permission of Emerson Network Power.

UNLESS OTHERWISE NOTED DIMENSIONS ARE IN INCHES AND TOLERANCES ARE:
3 PLACE DECIMALS ±.005
2 PLACE DECIMALS ±.02
FRACTIONS ±1/64
PARALLELITY: T.I.R. ____
FLATNESS: T.I.R. ____
CONCENTRICITY: T.I.R. ____
ANGLES AND PERPENDICULARITY: ±1°

CAGE CODE 34078

MIDWEST MICROWAVE

EMERSON. Network Power
Connectivity Solutions

TITLE
ATTENUATOR
0-30dB
OUTLINE DRAWING

DRAWN/DATE	ENG./DATE	DRAWING NUMBER	REV.
A.BEATTY 2/15/93	G.KOZAK 2/18/93	ATT-0451-XX-SMA-02-01	T
CHECKED/DATE M.HOLLMAN 2/17/93	APPROVED/DATE J.KEREKES 8/31/11	SCALE: NTS	SHEET 1 of 1