SIGN	DATE	DESCRIPTION	APPROVER
1	2010.06.08	Flange screw changed to universal screw	

THIS IS CAD DRAWING, DO NOT REVISE MANUALLY!!!

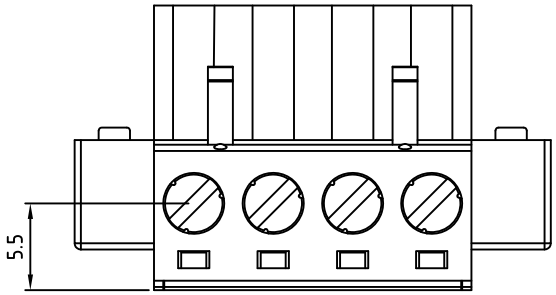

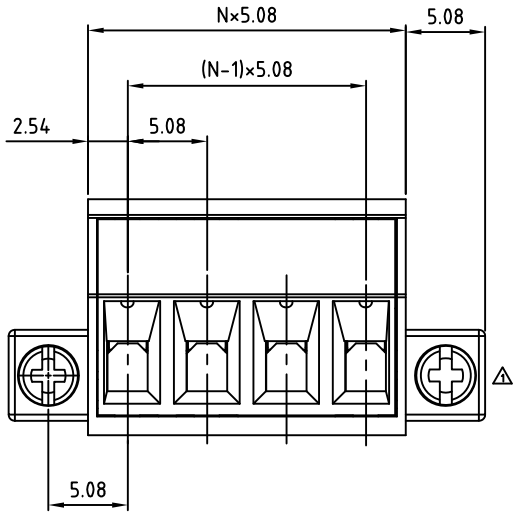

N=Number of poles

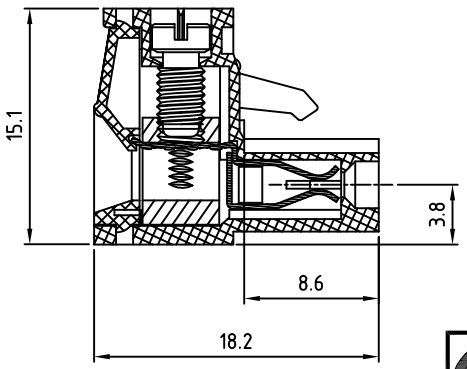

Material

- Terminal body (metal housing): Brass(CuZn)
- Terminal screw: Steel Zinc plating "-" slot type
- With flange screw : steel M2.5
- Wire guard: PhBz ,Tin plated
- Insulator (housing): Thermoplastic (UL94V-0)

Electrical cULus / CSA/VDE /TUV

- Voltage rating: 300V/250V/300V/300V
- Current rating: 20A/15A/20A/20A
- Wire range: $2.5mm^2$/ $0.34-2.5mm^2$
- Solid wire(AWG): 12-24/14-22
- Stranded wire(AWG): 12-24/14-22
- Torque: 5Lb-In/5kgf.cm/0.5N.m/0.56N.m
- Screw: M3
- Wire strip length: 7-8mm
- Withstanding Voltage: 1.6KV/1.5KV/2.5KV/2.5KV
- Operating temperature: -30° C to +105° C
- Safety Approval:

RoHS Compliant

PART NUMBER:

OSTTJXX5152

No. of Poles
02 2 Poles
03 3 Poles
... ...
24 24 Poles

COLOR
0: Black
5: Green (Standard)
6: Blue
8: Grey

THESE DRAWINGS AND SPECIFICATIONS ARE THE PROPERTY OF ON-SHORE TECHNOLOGY, INC. AND SHALL NOT BE REPRODUCED, COPIED OR USED IN ANY MANNER WITHOUT THE PRIOR WRITTEN CONSENT OF ON-SHORE TECHNOLOGY, INC.

ON-SHORE TECHNOLOGY, INC.

TITLE	OSTTJ-5.08mm Series with flange, 02-24 poles				
PART NO.	OSTTJXX5152			DWG NO.	OSTTJXX5152.DWG
APPROVED	CHECKED	DESIGNED	DRAWN	CUST NO.	
Shi Jun 2006.10.23	Marvin 2006.10.23	Marvin 2006.10.23	Marvin 2006.10.23	UNIT: mm / SCALE: NONE / SHEET: 01/01 / REV.: D	

Tolerance	
X.	±0.50
X.X	±0.30
X.XX	±0.10
X°	±1°