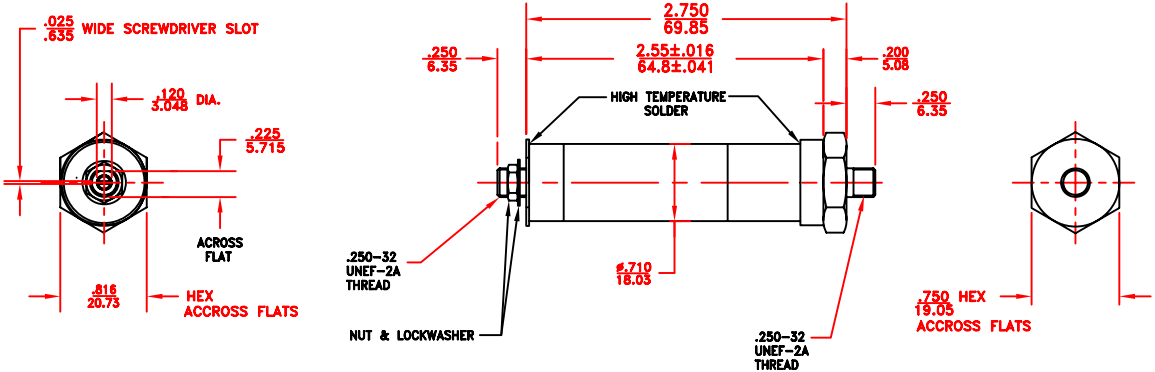

NOTES:

1. CAPACITANCE: Cmax ≥ 70 pF, Cmin ≤ 4.0 pF.
2. WORKING VOLTAGE: 6,000 VDC.
3. WITHSTANDING VOLTAGE: 12,000 VDC
4. Q ≥ 600 @ 25MHZ
5. TORQUE: 0.5 TO 5.0 oz–in.
6. CONSTRUCTION: 40 psi sealed, non magnetic
7. DIMENSIONS IN INCHES/MM.
8. WORKING TEMPERATURE RANGE: –55°C UP TO 125°C
9. ROTATIONAL LIFE: 10,000 TURNS

TOLERANCES: (EXCEPT AS NOTED)	SPRAGUE GOODMAN ELECTRONICS INC. 1700 SHAMES DRIVE WESTBURY, NY 11590			
DECIMAL: ±0.002 in ±0.051 mm	MATERIAL:	SCALE: 1:1	DRAWN BY: R. LEVIN	APPROVED: D. DITLYA
FRACTIONAL: 1/64	TITLE: SGNMNC3706HTT		USED FOR:	
ANGULAR: 1°	DATE: 08/27/08	DRAWING NUMBER SGNMNC3706HTT		REV. 02