THIS COPY IS PROVIDED ON A RESTRICTED BASIS AND IS NOT TO BE USED IN ANY WAY DETRIMENTAL TO THE INTERESTS OF PANDUIT CORP.

PANDUIT PART NUMBER	STUD SIZE	DIMENSIONS in.				
		A ±.020	W ±.010	C ±.015	M ±.020	H ±.005
P14-6FF	#6	.65 (16.51)	.28 (7.11)	.22 (5.59)	.49 (12.45)	.160 (4.06)
P14-8FF	#8	.72 (18.29)	.31 (7.87)	.25 (6.35)	.53 (13.46)	.173 (4.39)

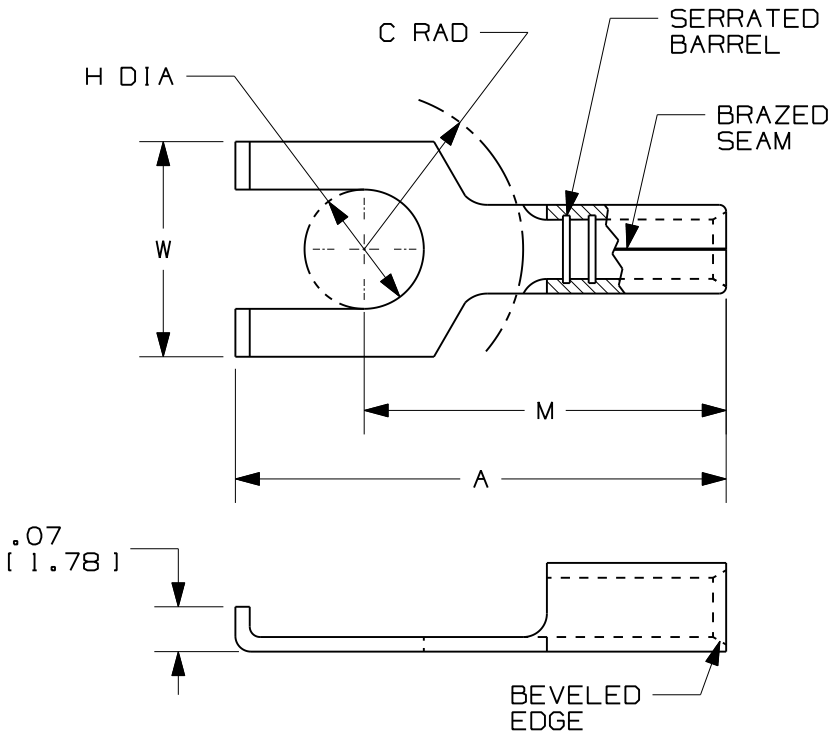

NOTES:

1. UL LISTED AND CSA CERTIFIED FOR:
   A. #16-14 AWG SOLID OR SRANDED COPPER WIRE
   B. 347° F (175° c) MAX. TEMP. RATING
2. MATERIAL:
   A. STAMPING - .03" (.76) THK COPPER, TIN PLATED
3. PACKAGE QTY: STD. PKG. 100
   BULK PKG. 1000
4. DIMENSIONS IN BRACKETS ARE IN MILLIMETERS
5. INSTALLATION TOOLS: CT-100, CT-160, CT-200
6. WIRE STRIP LENGTH: 9/32" (7.1)

LISTED 587H E52164

CERTIFIED LR31212

REV	DATE	BY	CHK	APR	DESCRIPTION	ECN
6	05.11.12	BDK	LSM	LSM	ADDED NOTE 6	A41237
5	11/01	SAB			THE TOLERERANCE FOR DIMENSION H WAS +/-.01	
4	10/01	SAB	SKB	LA	DIMENSION H FOR P14-6FF WAS .15, (3.81)	09712
3	1/10	RM	SKB	JAC	FILESPEC WAS A41237A::1:L1	08937
2	7-88	DW			REDRAWN WITH REVISIONS	

TITLE

#16-14 BARREL NON-INSULATED FLANGED FORK

CUSTOMER DRAWING

ITEM REVISION NAME: N41237BA/05

DATASET FILE NAME: N41237BA_DC_P14-FF/05A

UNLESS OTHERWISE SPECIFIED, DIMENSIONAL TOLERANCES ARE: IN [mm]

.X ± .XXX ±
.XX ± ANGLES ±

THIRD ANGLE PROJECTION

MATERIAL: SEE NOTES

DRAWING NUMBER: A41237

DRAWN BY	DATE	CHK	SCALE	SHT 1 OF 1	SIZE
DAW			N.T.S.		A

D10100DA/12