REV.	DATE	DESCRIPTION
A	10/28/99	MODIFY FERRULE PLATING

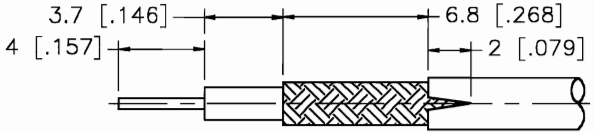

RECOMMENDED
CABLE STRIPPING DIM'S

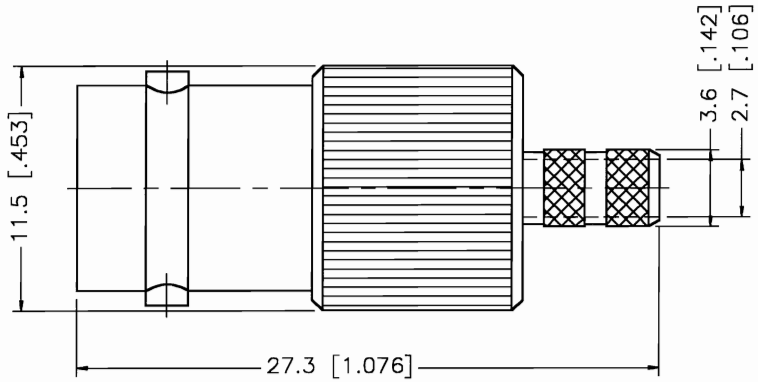

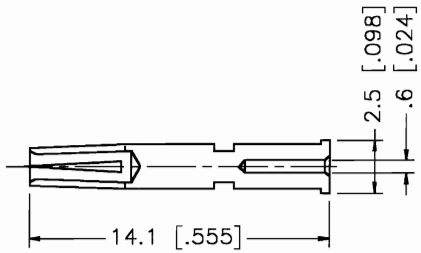

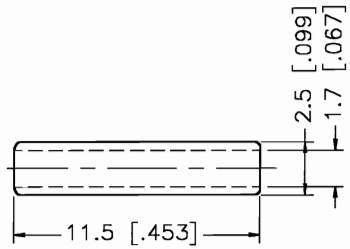

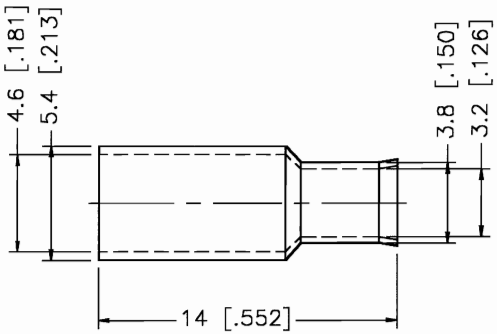

	DESCRIPTION	MATERIAL	FINISH
1	BODY	BRASS	NICKEL
2	INSULATOR	DELRIN	NATURAL
3	CONTACT PIN	PHOS. BRONZE	GOLD
4	SLEEVE	DELRIN	NATURAL
5	FERRULE	BRASS	NICKEL
6			
7			
8			

UNLESS OTHERWISE SPECIFIED DIMENSIONS ARE IN MILLIMETERS

DIMENSIONS IN [ ] ARE IN INCHES FOR CUSTOMER REFERANCE ONLY

UNLESS OTHERWISE SPECIFIED TOLERANCES FOR MILLIMETERS ARE:
0.5–6 = ± 0.2
6–30 = ± 0.4
30–120 = ± 0.6
120–315 = ± 1
315–1000 = ± 1.6
1000–2000 = ± 2.4

DO NOT SCALE DRAWING

APPROVALS		DATE
DRAWN	G.R.S.	10/25/99
CHECKED		
ISSUED		

connex
Connector Corporation

TITLE: BNC STRAIGHT CRIMP JACK (FOR RG–316/U DOUBLE BRAID CABLE)

SIZE	FSCM NO.	DWG. NO.	REV.
A	99001	112529.DWG	A

SCALE	NA	PART NO.	112529	SHEET	1 OF 1