used for: D-SUB

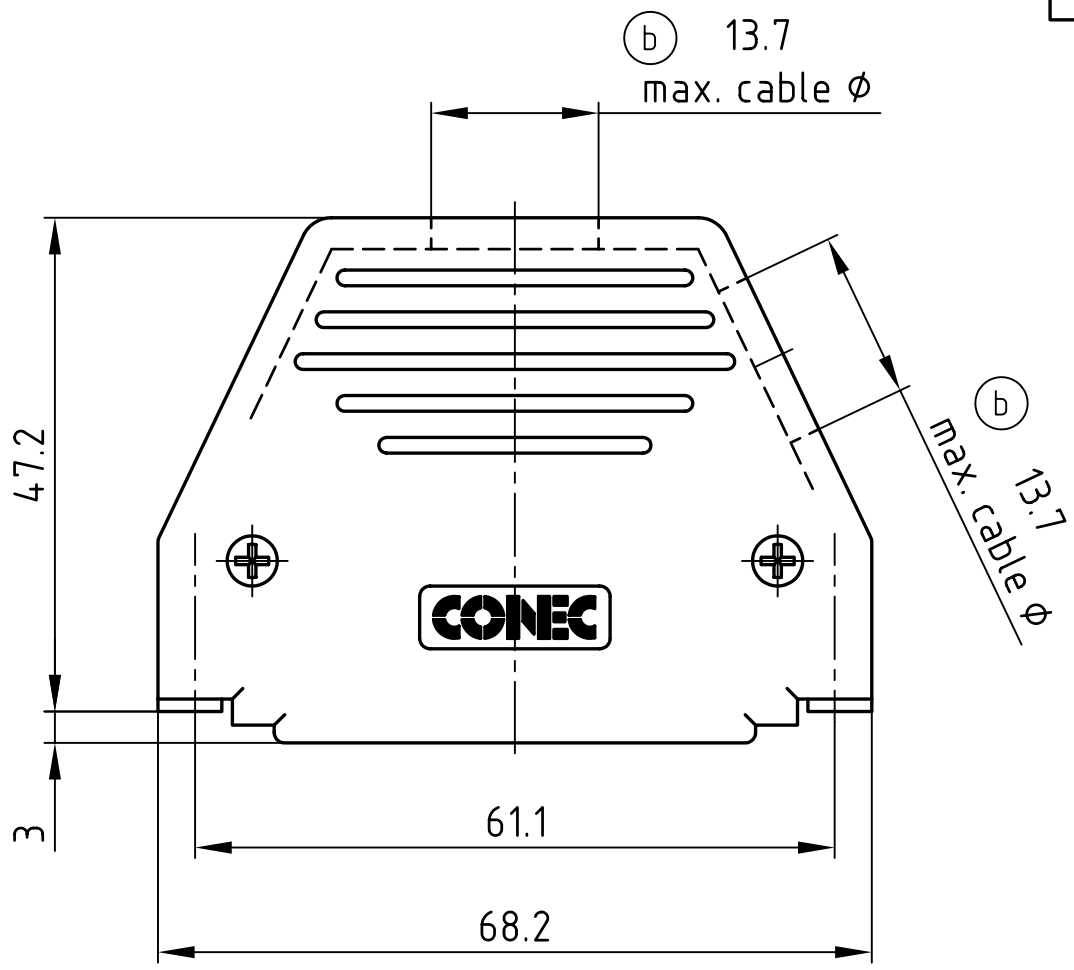

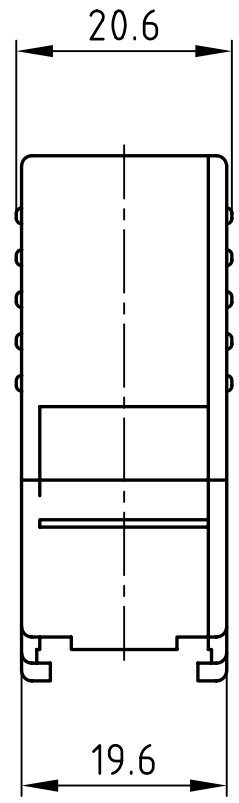

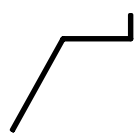 1 x SPRING	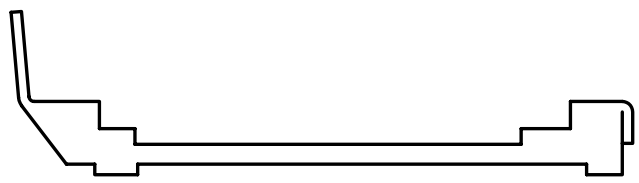 1 x SLIDE LOCK
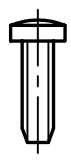 2 x SCREW	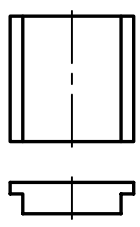 1 x BLIND PLUG

APPROVAL # FREIGABE # DEBLOCAGE # AUTOR/ZACION # APPROVAL

CUSTOMER APPROVAL DATE:

NAME: TITLE:

COMPANY NAME:

Directive 2002/95/EC „RoHS“ Compliant

MATERIAL:

HOOD: ABS UL 94 V-0; BLACK
SPRING: STEEL; TIN PLATED
SLIDE LOCK: STEEL; NICKEL PLATED
SREWS: STEEL; NICKEL PLATED
BLIND PLUG: ABS UL 94 V-0; BLACK

THIS DRAWING MAY NOT BE COPIED OR REPRODUCED IN ANY WAY, AND MAY NOT BE PASSED ON TO A THIRD PARTY WITHOUT WRITTEN PERMISSION. OWNERSHIP AND COPYRIGHT OF CONEC GmbH

DO NOT ALTER CAD DRAWING BY HAND

rev.	description	date	name
2 x b	Ä 2620	05.12.2006	ES
a	Origin		

tolerance

dim. in mm

	date	name
2006		
drawn	15.03.	Lehmenkühler
appd.	15.03.	Mickenbecker
norm		
d-old		

scale: 1:1

material: SEE NOTES

title:

PLASTIC HOOD

50pos. WITH TOP AND SIDE CABLE EXIT
with slide lock and spring

dwg no: 16K1A1778

AutoCAD 2006

DIN-A 4

sh: 1/1

part no: 165X16549X