EDZ 1200

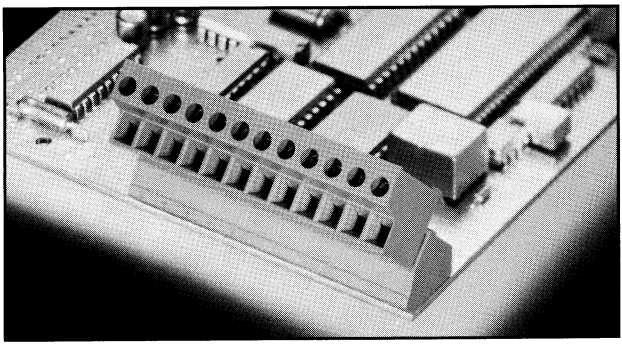

2-24 poles, Spacing 5.08 mm
insert required no. of poles ••
How to order see page 6

Ratings:

*Approvals pending

	UL1059 *	CSA 22.2 No. 158 *	DIN VDE 0627 *
Rated Voltage	**250 VB**	**300 VB**	**250 V**
Rated Current	**15 A**	**15 A**	**12 A (T60)**
Wire Size	**AWG 28-14**	**AWG 28-14**	**2.5 mm²**
Test Voltage			**2.21 kV**
Rated Torque/Screw Size			**0.5 Nm/M2.5**

Rated Cross Section

Single Wire (solid)	**2.5 mm²**
Stranded Wire (flexible)	**2.5 mm²**
Stranded wire with Ferrules	**2.5 mm²**

Dimensions

Spacing	**5.08 mm**
Stripped Length	**10.0 mm**

Materials
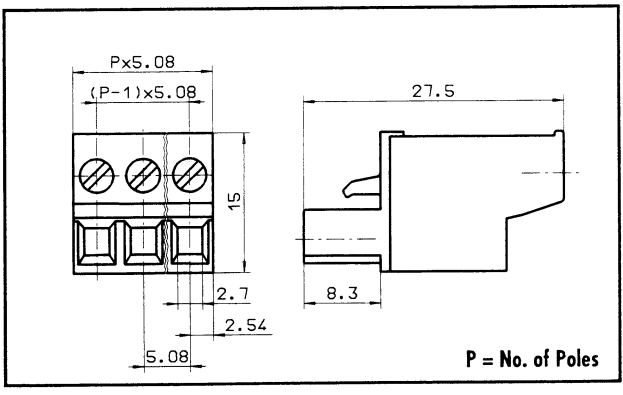
Insulating Material	**PA**
Flammability Class	**UL94 V-0**
Temperature Range	**-30°C/+105°C**
Clamp Cage	**Fe/Fe**
Contact	**CuSn**
Color	**Green**