THIS DRAWING IS UNPUBLISHED. RELEASED FOR PUBLICATION 20
© COPYRIGHT 20 BY TYCO ELECTRONICS CORPORATION. ALL RIGHTS RESERVED.

LOC	DIST
FT	0

REVISIONS

P	LTR	DESCRIPTION	DATE	DWN	APVD
	B2	REVISED PER ECO-10-014504	19OCT2010	HMR	MG

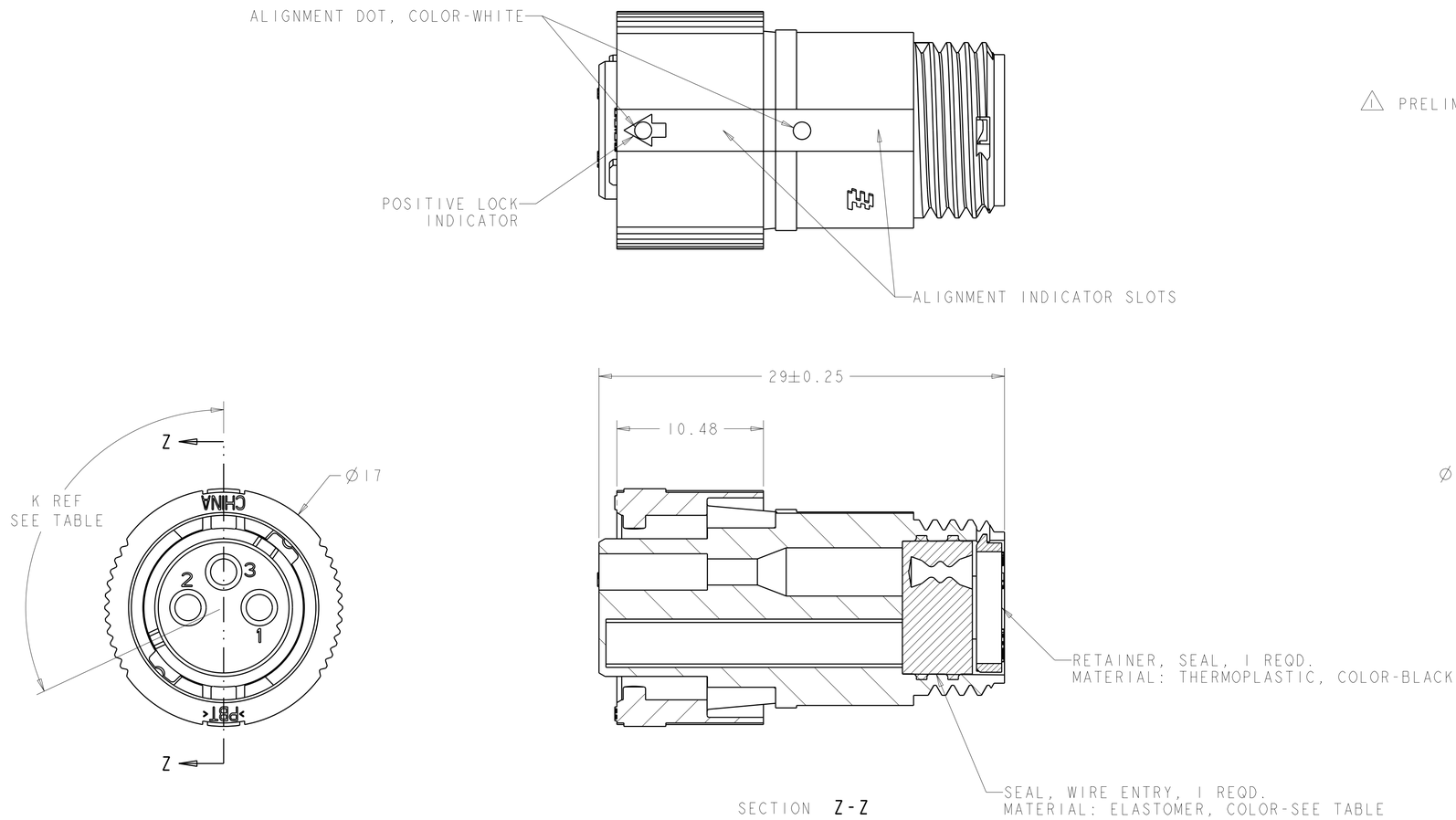

⚠1 PRELIMINARY - NOT FOR PRODUCTION

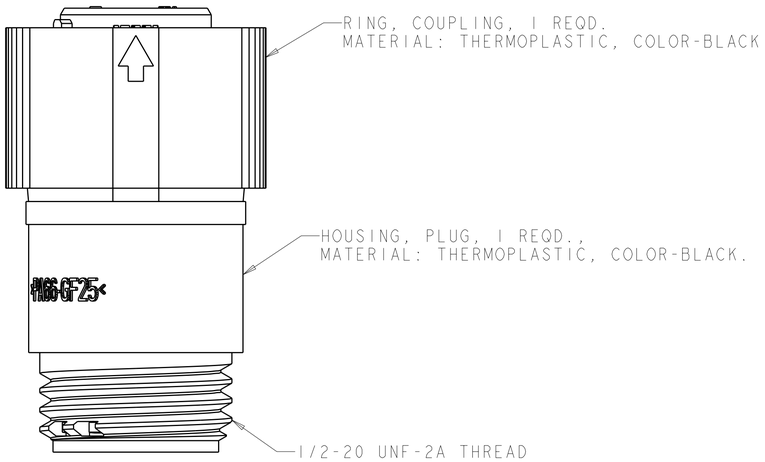

QUALIFICATION TEST PENDING

HOUSING COLOR	SEAL, WIRE ENTRY COLOR	ØX REF	K REF	PART NUMBER
RED	NATURAL	Ø1.5	115°	⚠1 1445534-05
BLACK	YELLOW	Ø0.75	130°	1445534-04
BLACK	NATURAL	Ø1.5	115°	1445534-03
BLACK	NATURAL	Ø1.5	130°	1445534-02
BLACK	YELLOW	Ø0.75	115°	1445534-01

THIS DRAWING IS A CONTROLLED DOCUMENT FOR TYCO ELECTRONICS CORPORATION. IT IS SUBJECT TO CHANGE AND THE CONTROLLING ENGINEERING ORGANIZATION SHOULD BE CONTACTED FOR THE LATEST REVISION.

DIMENSIONS: mm

TOLERANCES UNLESS OTHERWISE SPECIFIED:
0 PLC ±-
1 PLC ±0.5
2 PLC ±0.13
3 PLC ±0.013
4 PLC ±0.0001
ANGLES ±-

MATERIAL: SEE CALLOUT

FINISH: -

DWN: S. WIEST 07MAY2001
CHK: G. DOUTY 07MAY2001
APVD: H. WAKEEM 12JUN2003
PRODUCT SPEC: -
APPLICATION SPEC: -
WEIGHT: -

Tyco Electronics
Tyco Electronics
Harrisburg, PA 17105-3608

NAME: ASSEMBLY, PLUG, SIZE 8, 3 POSITION, SEALED, MINI CPC

SIZE: A1 | CAGE CODE: 00779 | DRAWING NO: C-1445534 | RESTRICTED TO: -

CUSTOMER DRAWING | SCALE: 5:1 | SHEET 1 OF 1 | REV B2

AMP 4805 REV 31MAR2000
Pro/ENGINEER DRAWING