used for: D-SUB

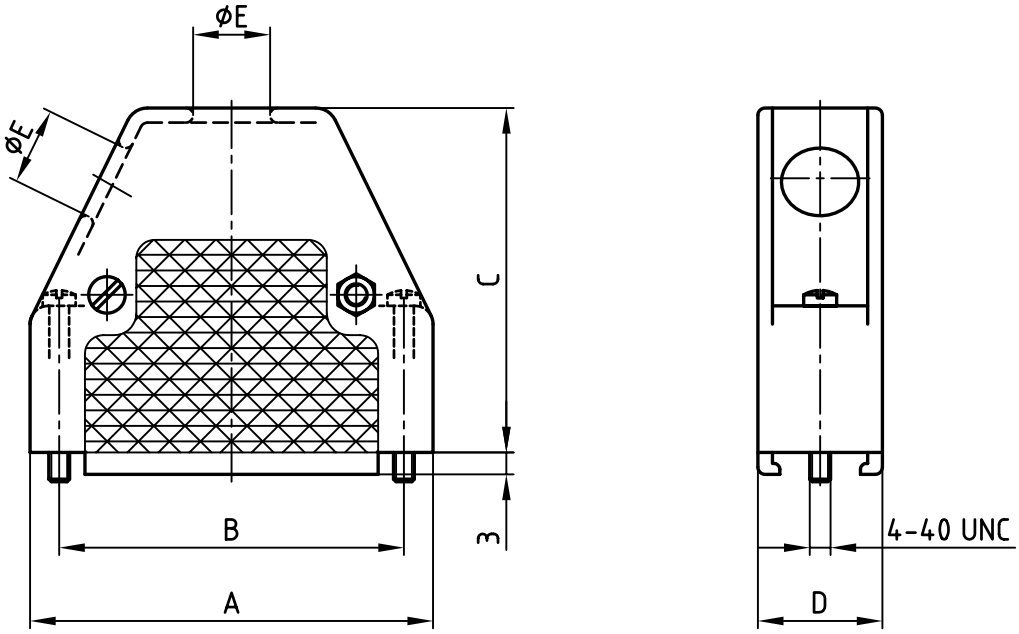


| No. of pos. | A | B | C | D | ØE | Part No: |
|---|---|---|---|---|---|---|
| 9 | 33.0 | 25.0 | 45.0 | 17.0 | 7.5 | **165X13019X** |
| 15 | 41.0 | 33.3 | 45.0 | 17.0 | 8.5 | **165X13029X** |
| 25 | 55.0 | 47.0 | 47.0 | 17.0 | 10.5 | **165X13039X** |
| 37 | 71.3 | 63.5 | 51.0 | 17.0 | 11.0 | **165X13049X** |
| 50 | 69.0 | 61.1 | 50.0 | 20.0 | 12.5 | **165X13059X** |

Directive 2002/95/EC „RoHS" Compliant

NOTES:
1. HOOD: ABS UL 94 V-0
2. SCREWS: BRASS

THIS DRAWING MAY NOT BE COPIED OR REPRODUCED IN ANY WAY, AND MAY NOT BE PASSED ON TO A THIRD PARTY WITHOUT WRITTEN PERMISSION. OWNERSHIP AND COPYRIGHT OF CONEC GmbH

DO NOT ALTER CAD DRAWING BY HAND

| rev. | description | date | name |
|---|---|---|---|

tolerance

| 2001 | date | name |
|---|---|---|
| drawn | 02.10. | Parei |
| appd. | 02.10. | Mickenbecker |
| norm | | |
| d-old | | |

CONEC®

scale: 1:1
material: SEE NOTES

title:
PLASTC HOOD
with straight and side cable entry
with short screws, 9 - 50 pos.

dwg no: 16K1A320A
AutoCAD 2000
DIN-A 4
sh: 1/1

part no: SEE TABLE