UF300BNA series

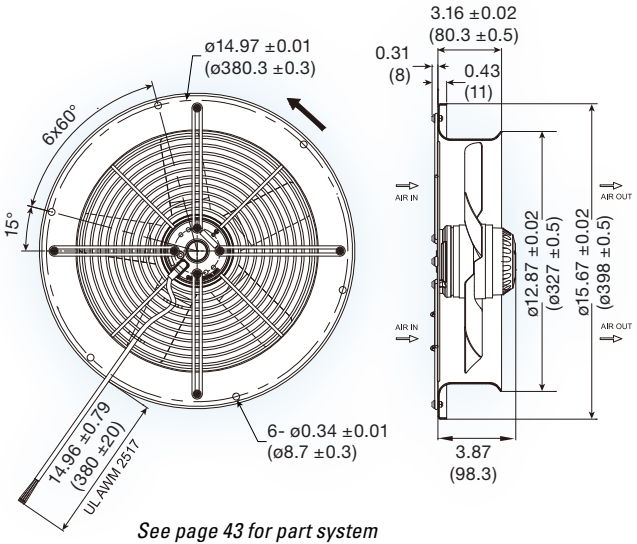

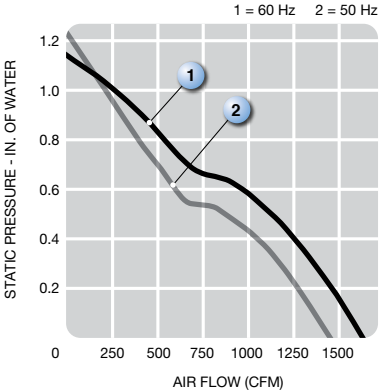

(398 dia. x 98.3 mm)

15.67 dia. x 3.87 inches

Features:	forward curved impeller
Operating voltage:	115 or 230 VAC
Construction:	aluminum die cast motor base, steel frame and impeller
Bearing option:	ball bearing
Motor:	permanent split capacitor
Air Flow:	axial
Connection:	AWM 2517 lead wires

See page 43 for part system

Model No.	Rated Voltage V	Freq. HZ	Input Power W	Rated Cur. A	Locked Cur. A	Speed RPM	Air Volume		Max. Static Pressure (H_2O)		Sound Noise dbA	Weight kg
							M^3/Min.	CFM	MM	INCH		
UF300BNA12-H1C2A	115	50	150	1.60	3.15	2,650	40.6	1435	31	1.2	75	4.5
	115	60	200	2.40	3.10	2,950	45.7	1615	29	1.1	78	4.5
UF300BNA23-H1C2A	230	50	150	0.90	1.60	2,650	40.6	1435	31	1.2	75	4.5
	230	60	200	1.20	1.56	2,950	45.7	1615	29	1.1	78	4.5