samtec

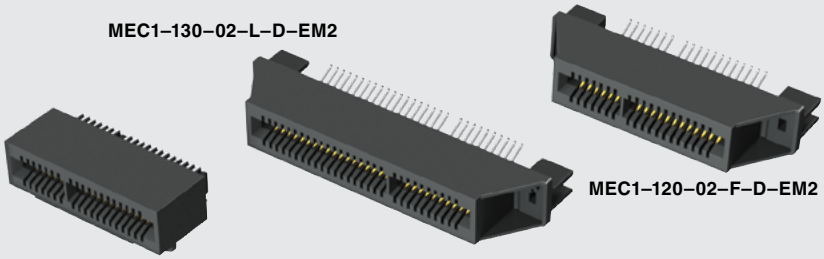

(1.00 mm) .0394"

MEC1-RA, MEC1-EM SERIES

RIGHT-ANGLE/EDGE MOUNT SOCKETS

SPECIFICATIONS

For complete specifications and recommended PCB layouts see www.samtec.com?MEC1-RA

Insulator Material: Black LCP
Contact Material: Phosphor Bronze
Plating: Au or Sn over 50 µ" (1.27 µm) Ni
Current Rating: 1.6 A per pin (2 adjacent pins powered)
Operating Temp Range: -55 °C to +125 °C
Insertion Depth: (5.84 mm) .230" to (8.13 mm) .320"
RoHS Compliant: Yes

PROCESSING

Lead–Free Solderable: Yes
SMT Lead Coplanarity:
(0.10 mm) .004" max (05-40)
(0.15 mm) .006" max (50-70)

RECOGNITIONS

For complete scope of recognitions see www.samtec.com/quality

FILE NO. E111594

MEC1 - 1 - POSITIONS PER ROW - CARD SLOT - PLATING OPTION - D - RA1 - NP - SL

Mates with:
(1.60 mm)
.062" card

05, 08, 20, 30, 40, 50, 60, 70

–02
= (1.60 mm) .062" thick card

–F
= Gold flash on contact, Matte Tin on tail

–L
= 10 µ" (0.25 µm) Gold on contact, Matte Tin on tail

POSITIONS PER ROW	POLARIZED POSITIONS
05	3, 4
08	5, 6
20	15, 16
30	21, 22
40	31, 32
50	41, 42
60	31, 32, 63 & 64
70	53, 54, 115 & 116

Note: While optimized for 50 Ω applications, this connector with alternative signal/ground patterns may also perform well in certain 75 Ω applications. Contact Samtec for further information.

–NP
= No Polarization (8 positions only)
Leave Blank for polarization

ALSO AVAILABLE (MOQ Required)
- Elevated body height
- Other platings

Contact Samtec.

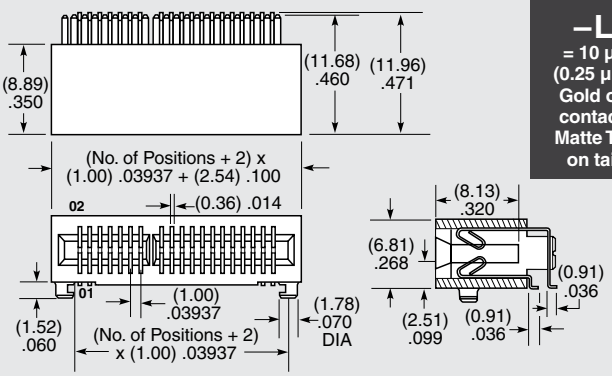

Note: Some sizes, styles and options are non-standard, non-returnable.

HIGH-SPEED CHANNEL PERFORMANCE

MEC1-RA

Rating based on Samtec reference channel. For full SI performance data visit Samtec.com or contact SIG@samtec.com

15 Gbps

APPLICATION

Samtec recommends that pads on the mating board be Gold plated.

SPECIFICATIONS

For complete specifications and recommended PCB layouts see www.samtec.com?MEC1-EM

Insulator Material: Black LCP
Contact Material: Phosphor Bronze
Plating: Au or Sn over 50 µ" (1.27 µm) Ni
Current Rating: 1.8 A per pin (2 adjacent pins powered)
Operating Temp Range: -55 °C to +125 °C
Insertion Depth: (5.84 mm) .230" to (8.13 mm) .320"
RoHS Compliant: Yes
Lead–Free Solderable: Yes

RECOGNITIONS

For complete scope of recognitions see www.samtec.com/quality

FILE NO. E111594

MEC1 - 1 - POSITIONS PER ROW - 02 - PLATING OPTION - D - EM2 - NP

Mates with:
(1.60 mm)
.062" card

05, 08, 20, 30, 40, 50, 60, 70

–F
= Gold flash on contact, Matte Tin on tail

–L
= 10 µ" (0.25 µm) Gold on contact, Matte Tin on tail

–NP
= No Polarization (8 positions only)
Leave Blank for polarization

ALSO AVAILABLE (MOQ Required)
- Edge mount leads for (0.80 mm) .031" thick board
- Other platings

Contact Samtec.

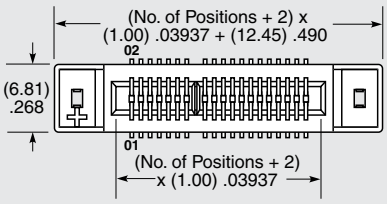

Note: While optimized for 50 Ω applications, this connector with alternative signal/ground patterns may also perform well in certain 75 Ω applications. Contact Samtec for further information.

POSITIONS PER ROW	POLARIZED POSITIONS
05	3, 4
08	5, 6
20	15, 16
30	21, 22
40	31, 32
50	41, 42
60	31, 32, 63 & 64
70	53, 54, 115 & 116

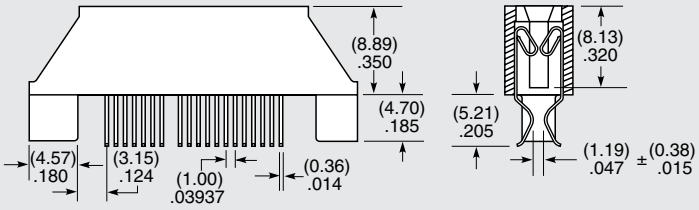

Note: Some sizes, styles and options are non-standard, non-returnable.

Due to technical progress, all designs, specifications and components are subject to change without notice.